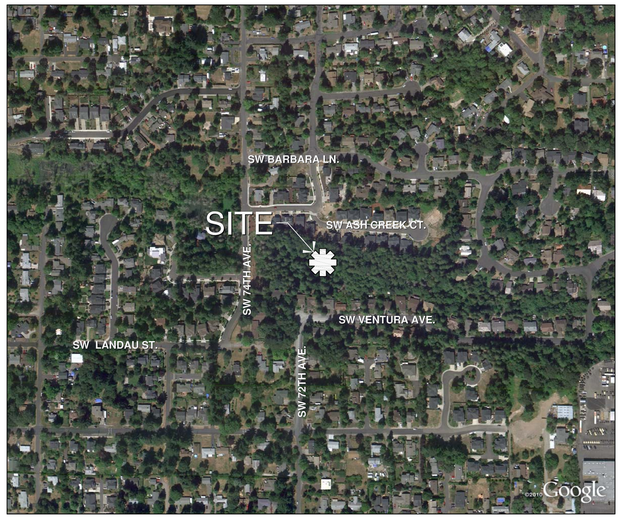

N

VICINITY MAP

N.T.S.

N

LOCATION MAP

N.T.S.

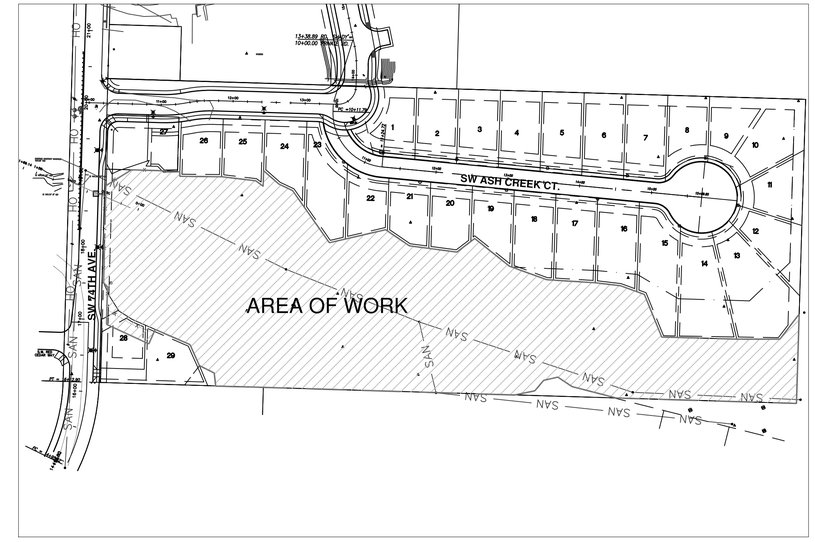

N

AREA OF WORK MAP

N.T.S.

PROJECT TEAM

OWNER'S REPRESENTATIVE

TODD PRAGER - CITY OF TIGARD
ASSOCIATE PLANNER/ARBORIST
501 N. DIXON STREET
TIGARD, OR 97223
(503) 718-2700

LANDSCAPE ARCHITECT

TROY MEARS, RLA
MEARS DESIGN GROUP, LLC
PO Box 23338
TIGARD, OR 97281
(503) 601-4516
(503) 924-4688 FAX

GENERAL NOTES

1. ADVISE THE LANDSCAPE ARCHITECT OF ANY CONFLICTS OR DISCREPANCIES 2 (TWO) WORKING DAYS PRIOR TO STARTING WORK.
2. STAGING AREAS ARE TO BE WITHIN THE DESIGNATED CONSTRUCTION LIMITS. IF THE CONTRACTOR REQUIRES ADDITIONAL AREA, THEY SHALL SUBMIT A WRITTEN REQUEST TO THE OWNER'S REPRESENTATIVE.
3. VERIFY ALL SITE CONDITIONS BY SITE VISIT PRIOR TO BID SUBMISSION.
4. VERIFY LOCATION OF ALL UTILITIES PRIOR TO COMMENCEMENT OF WORK FOR LOCATIONS CONTACT TIGARD PUBLIC WORKS DEPARTMENT, (503) 718-2591 AND THE UTILITIES NOTIFICATION CENTER 1(800) 332-2344 NOT LESS THAN 48 HOURS PRIOR TO BEGINNING WORK.

DRAWING INDEX

SHEET TITLE	SHEET NUMBER
COVER SHEET	L0
PLANTING PLAN	L1
PLANTING PLAN	L2
IRRIGATION PLAN	L3
IRRIGATION PLAN	L4
DETAILS AND NOTES	L5

MEARS DESIGN GROUP
Landscape Architecture & Planning
PO Box 23338 | Tigard, Oregon | 97281
Phone: 503.601.4516 | Fax: 503.924.4688

REGISTERED 540
TROY A. MEARS
OREGON
LANDSCAPE ARCHITECT

ASH CREEK REFORESTATION

TREE PLANTING PROJECT

SW 74TH AVENUE
CITY OF TIGARD, OREGON

REVISIONS

REV.	DATE	DESCRIPTION

SHEET NAME: COVER SHEET

DRAWN BY:	TAM
CHECKED BY:	TAM
ISSUE DATE:	4/29/2011
JOB NO.:	0927

SHEET: L0

OF 6

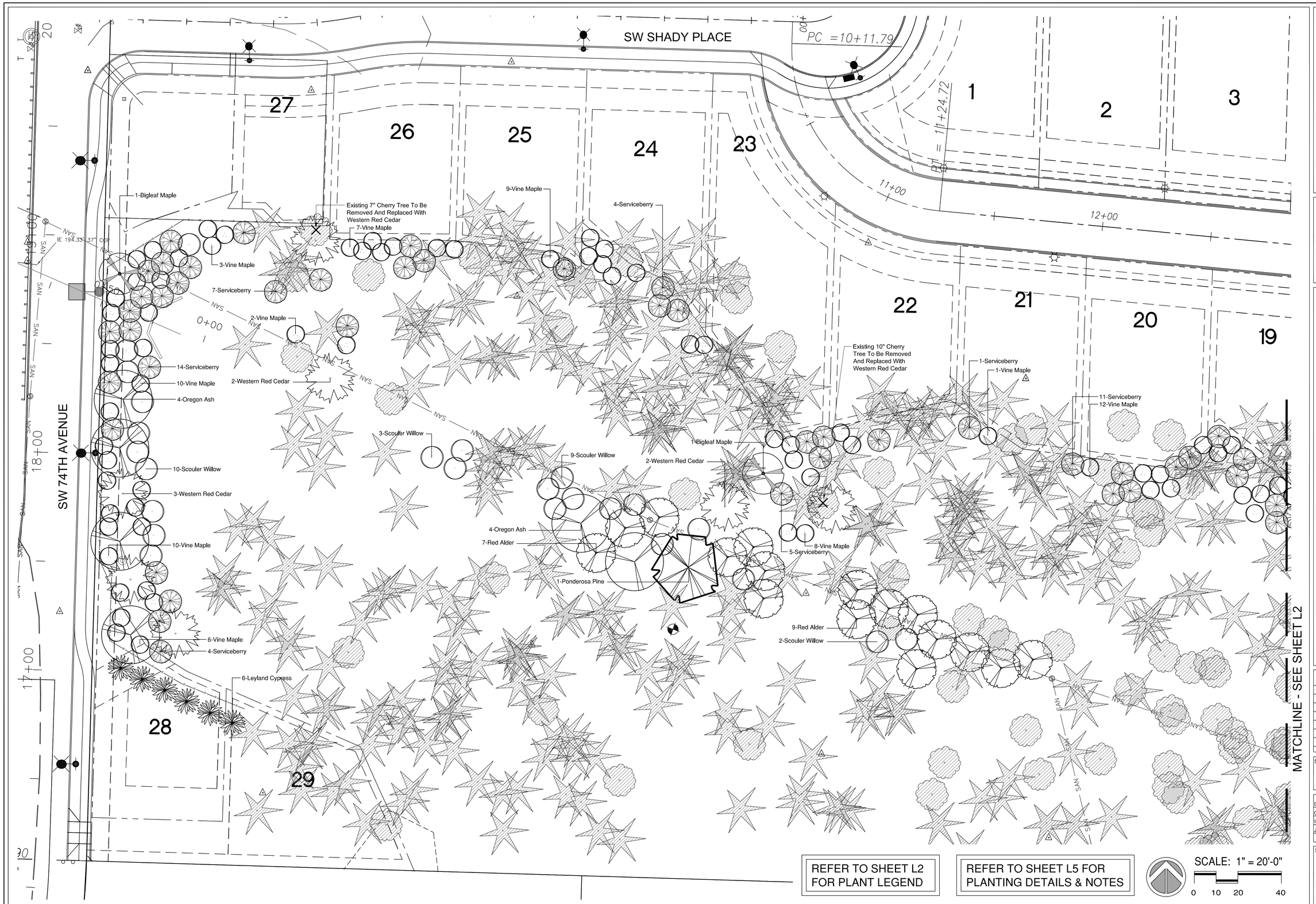

MEARS DESIGN GROUP
Landscape Architecture & Planning
PO Box 23338 | Tigard, Oregon | 97281
Phone: 503.601.4516 | Fax: 503.924.4688

REGISTERED 540
TROY A. MEARS
OREGON
LANDSCAPE ARCHITECT

ASH CREEK REFORESTATION

TREE PLANTING PROJECT

SW 74TH AVENUE
CITY OF TIGARD, OREGON

REVISIONS

REV.	DATE	DESCRIPTION

SHEET NAME: PLANTING PLAN

DRAWN BY:	TAM
CHECKED BY:	TAM
ISSUE DATE:	4/29/2011
JOB NO.:	0927

SHEET: L1 OF 6

PLANT MATERIALS LISTING:

SYM	TREES (BOTANICAL NAME / COMMON NAME)	QTY.	SIZE	CONDITION	REMARKS
	Acer circinatum Vine Maple	105	6-7'	B&B	multi-stem
	Acer macrophyllum Bigleaf Maple	2	2" Cal.	B&B	30 o/c.
	Amelanchier alnifolia Serviceberry	73	1" Cal.	B&B	10' o/c.
	Alnus rubra Red Alder	16	2" Cal.	B&B	20' o/c.
	xCupressocyparis leylandii Leyland Cypress	6	2" Cal.	B&B	10' o/c.
	Fraxinus latifolia Oregon Ash	6	2" Cal.	B&B	20' o/c.
	Pinus ponderosa Ponderosa Pine	1	3" Cal.	B&B	30' o/c.
	Salix scouleriana Scouler Willow	24	1" Cal.	B&B	10' o/c.
	Thuja plicata Western Red Cedar	7	3" Cal.	B&B	30' o/c.
Total Proposed Mitigation Trees		240			

EXISTING TREES TO REMAIN UNLESS OTHERWISE NOTED

REFER TO SHEET L5 FOR PLANTING DETAILS & NOTES

SCALE: 1" = 20'-0"

0 10 20 40

MEARS DESIGN GROUP
Landscape Architecture & Planning
PO Box 23338 | Tigard, Oregon | 97281
Phone: 503.601.4516 | Fax: 503.924.4688

REGISTERED 540
TROY A. MEARS
OREGON
LANDSCAPE ARCHITECT

ASH CREEK REFORESTATION

TREE PLANTING PROJECT

SW 74TH AVENUE
CITY OF TIGARD, OREGON

REVISIONS

REV.	DATE	DESCRIPTION

SHEET NAME: PLANTING PLAN

DRAWN BY:	TAM
CHECKED BY:	TAM
ISSUE DATE:	4/29/2011
JOB NO.:	0927

SHEET: L2 OF 6

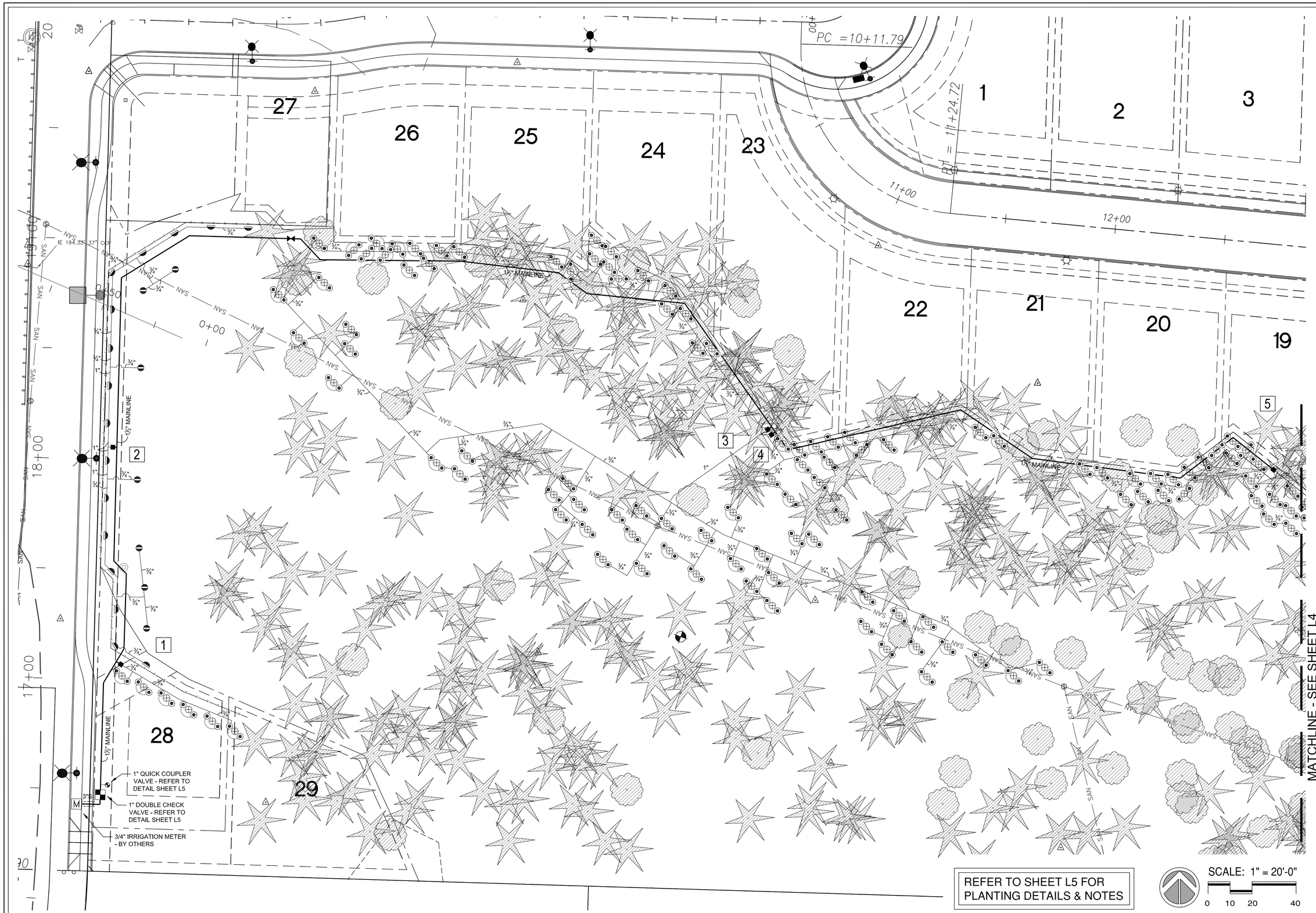

REFER TO SHEET L5 FOR PLANTING DETAILS & NOTES

MEARS DESIGN GROUP
Landscape Architecture & Planning
PO Box 23338 | Tigard, Oregon | 97281
Phone: 503.601.4516 | Fax: 503.924.4688

REGISTERED 540
TROY A. MEARS
OREGON
LANDSCAPE ARCHITECT

ASH CREEK REFORESTATION

TREE PLANTING PROJECT

SW 74TH AVENUE
CITY OF TIGARD, OREGON

REVISIONS

REV.	DATE	DESCRIPTION

SHEET NAME: IRRIGATION PLAN

DRAWN BY:	TAM
CHECKED BY:	TAM
ISSUE DATE:	4/29/2011
JOB NO.:	0927

SHEET: L3

OF 6

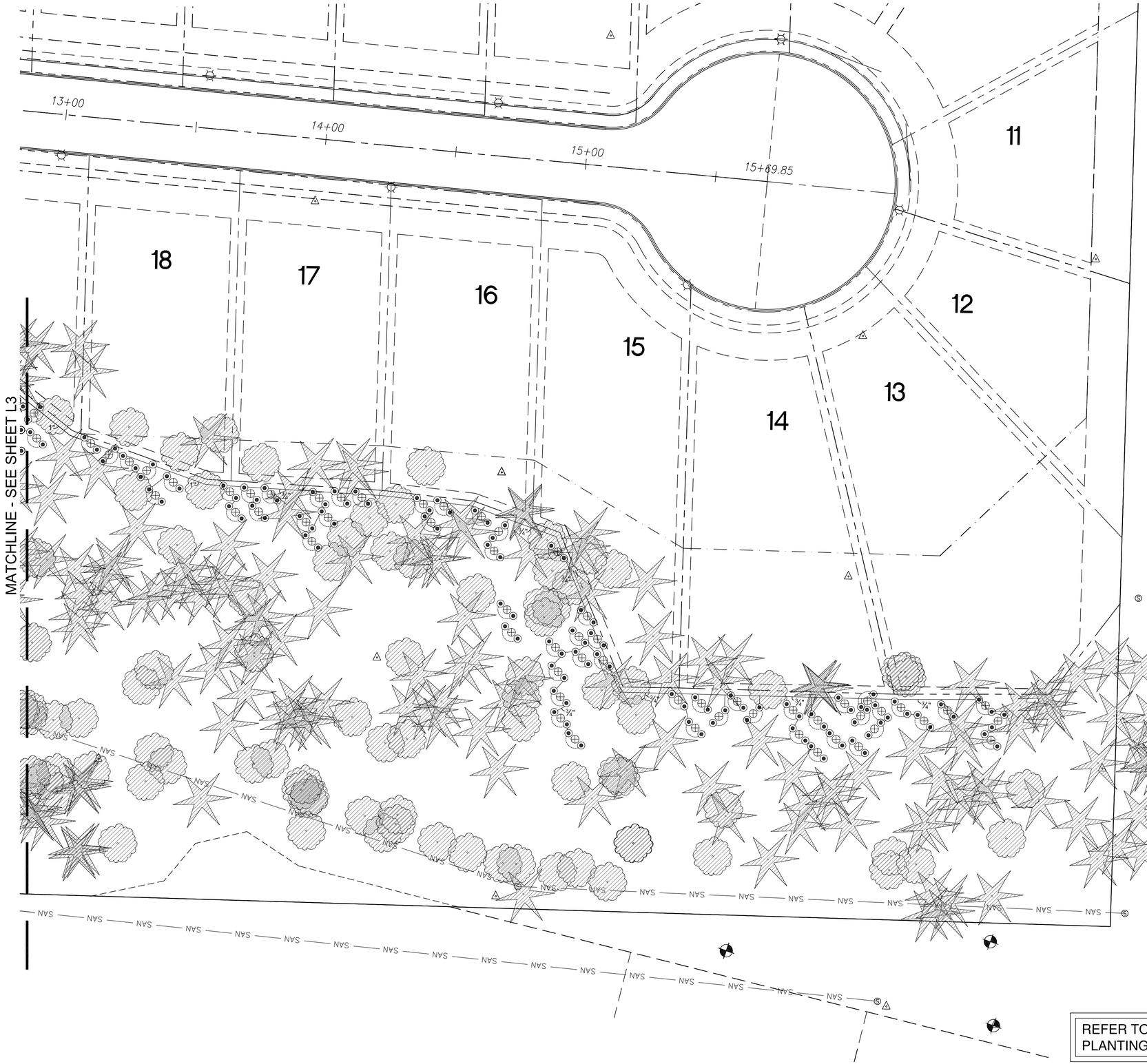

GENERAL KEY

SYM.	DESCRIPTION
2"S	CLASS 200 PVC SLEEVE - SIZE AS NOTED
1.5" M.L.	SCH. 40 IRRIGATION MAINLINE - SIZE AS NOTED
3/4"	CLASS 200 PVC LATERALS - SIZE AS NOTED
	IRRIGATION ISOLATION VALVE - SAME SIZE AS MAINLINE
	EXISTING 1" QUICK COUPLING VALVE SEE DETAIL 4/L5
	HUNTER ICV AUTOMATIC CONTROL VALVE W/ SVC-100 CONTROL MODULE - SEE DETAIL 2/L5
	HUNTER ICZ-101-40 DRIP MANIFOLD W/ SVC-100 CONTROL MODULE - SEE DETAIL 1/L5
1	CONTROL VALVE NUMBER - REFER TO VALVE KEY
	DRIP AIR RELIEF VALVE - SEE DETAIL 5/L5
	TREE WELL IRRIGATION - SEE DETAIL 3/L5
	INDICATES TREE LOCATION - SEE SHEET L1 & L2

VALVE KEY

CONTROL VALVE NO. (TR=TREES)	1	2	3	4	5					
G.P.M.	1	21	3	3	5					
CONTROL VALVE SIZE	1.0	1.0	1.0	1.0	1.0					

DESIGN CRITERIA

THE DESIGN OF THE IRRIGATION SYSTEM IS BASED ON 50 P.S.I. @ 40 G.P.M.

GENERAL NOTES

- LANDSCAPE CONTRACTOR IS RESPONSIBLE FOR ALL SLEEVING UNDER ALL HARD SURFACES EXCEPT WHAT HAS BEEN INSTALLED PREVIOUSLY BY GENERAL CONTRACTOR (REFER TO DRAWINGS). COORDINATE W/ GEN. CONTRACTOR.
- INSTALL VALVE BOXES PERPENDICULAR TO WALLS, WALKS AND CURBS.
- RAINBIRD SERIES BODIES TO BE 1806-SAM: (W/ MP ROTATOR NOZZLES)
- ADJUST MP ROTATOR NOZZLES TO MEET REQUIRED HEAD-TO-COVERAGE AND ARC TO MATCH LANDSCAPE.
- WHEN PLACING MORE THAN ONE PIPE IN A TRENCH, ALLOW A MIN. OF 6" BETWEEN PIPES.
- ONE VALVE MAX. PER STANDARD VALVE BOX - TWO VALVES MAX. PER JUMBO VALVE BOX.
- PLACE VALVES IN SHRUB BEDS WHERE POSSIBLE.
- INSTALL HEADS FLUSH WITH TOP OF WALLS, WALKS AND CURBS.
- ADJUST HEAD LOCATION AS REQUIRED TO AVOID TREES, SIGNS, LIGHT POLES AND OTHER FIXED OBJECTS.
- SINGLE BARE TRACE WIRE REQUIRED ON TOP OF ALL MAINLINE.
- TWO STEP GLUE REQUIRED ON ALL PVC MAINLINE THAT IS NOT GASKETED.
- PLACE CONTROL WIRE 3 TO 6" AWAY FROM MAINLINE

REFER TO SHEET L5 FOR PLANTING DETAILS & NOTES

SCALE: 1" = 20'-0"

0 10 20 40

MEARS DESIGN GROUP
Landscape Architecture & Planning
PO Box 23338 | Tigard, Oregon | 97281
Phone: 503.601.4516 | Fax: 503.924.4688

REGISTERED 540
TROY A. MEARS
OREGON
LANDSCAPE ARCHITECT

ASH CREEK REFORESTATION

TREE PLANTING PROJECT

SW 74TH AVENUE
CITY OF TIGARD, OREGON

REVISIONS

REV.	DATE	DESCRIPTION

SHEET NAME: IRRIGATION PLAN

DRAWN BY:	TAM
CHECKED BY:	TAM
ISSUE DATE:	4/29/2011
JOB NO.:	0927

SHEET: L4 OF 6

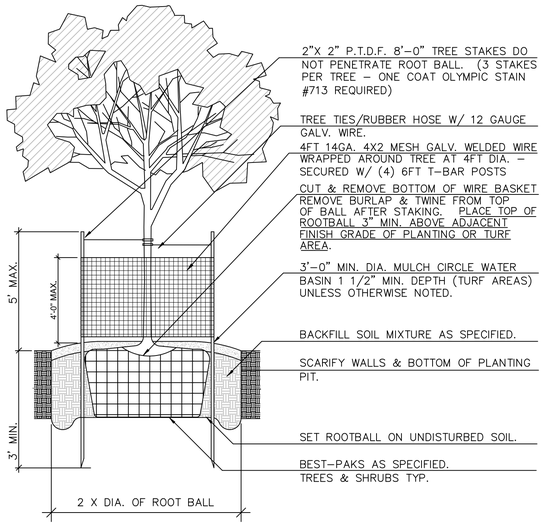

TREE PLANTING DETAIL

NTS

NOTES

1. B&B STOCK MAY BE SUBSTITUTED WITH CONTAINER STOCK OF EQUAL GRADE.
2. CONTAINER STOCK MAY BE SUBSTITUTED WITH B&B STOCK OF EQUAL GRADE.
3. PLANT MATERIAL SHALL CONFORM WITH AMERICAN STANDARD FOR NUSERY STOCK, ANSI Z60.1, 1986 EDITION.
4. ALL TREES SHALL BE BRANCHED.
5. MULCH ALL PLANTING BEDS WITH 2" MIN. LAYER OF SPECIFIED MULCH.
6. IN THE EVENT OF A DISCREPANCY BETWEEN THIS MATERIAL LISTING AND THE DRAWINGS, THE DRAWINGS SHALL GOVERN THE PLANT SPECIES AND QUANTITIES REQ.
7. IN THE EVENT OF QUESTION OR LACK OF CLARITY ON DRAWINGS, LANDSCAPE CONTRACTOR IS TO CALL LANDSCAPE ARCHITECT BEFORE PROCEEDING.
8. LANDSCAPE CONTRACTOR IS TO NOTIFY LANDSCAPE ARCHITECT PRIOR TO INSTALLATION OF PLANT MATERIAL.
9. LANDSCAPE CONTRACTOR TO VERIFY TREE QUANTITIES.
10. LANDSCAPE CONTRACTOR IS TO RECEIVE WRITTEN AUTHORIZATION OF PLANT MATERIAL QUALITY ACCEPTANCE BEFORE INSTALLATION BEGINS.

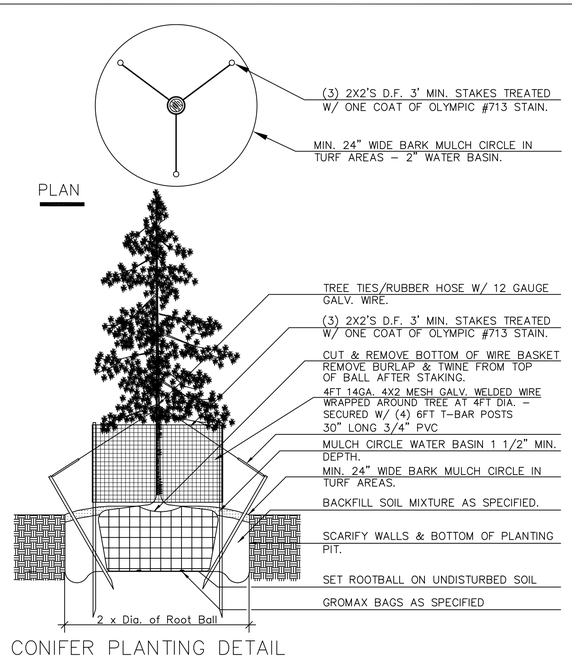

CONIFER PLANTING DETAIL

NTS

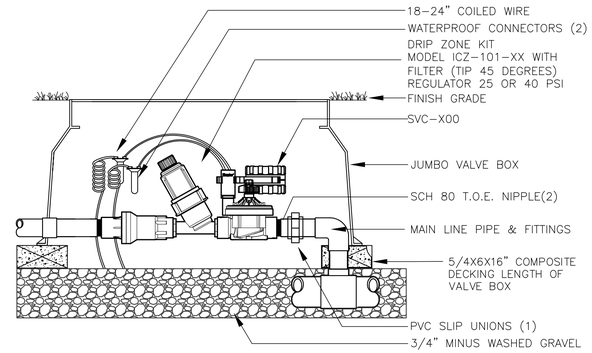

1 / L5 1" DRIP CONTROL VALVE MANIFOLD

(XCZ-100-LF DRIP MANIFOLD KIT)

NTS

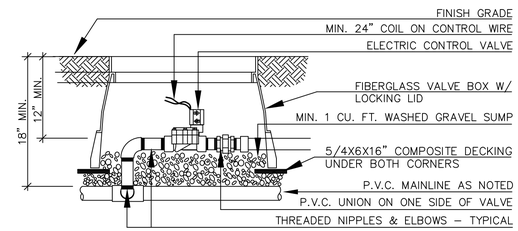

2 / L5 CONTROL VALVE & BOX DETAIL

NTS

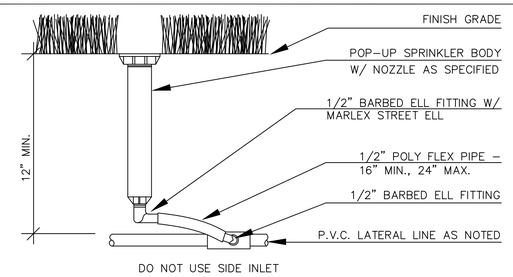

POLY FLEX RISER DETAIL 1806 SERIES ONLY

NTS

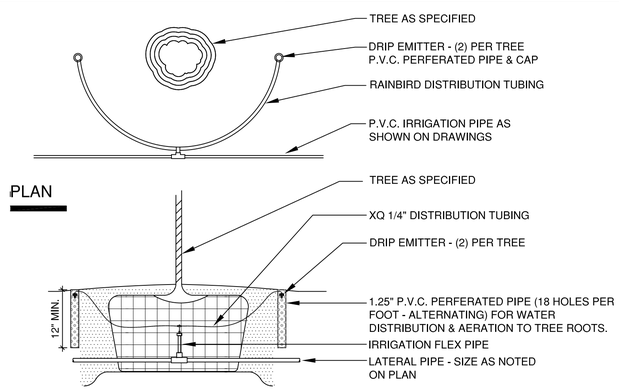

3 / L5 TREE WELL IRRIGATION DETAIL

NTS

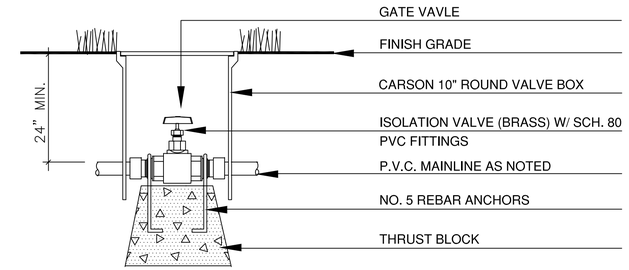

4 / L5 ISOLATION / GATE VALVE DETAIL

(MAINLINE GATE VALVE SIZE - 2" AND SMALLER)

NTS

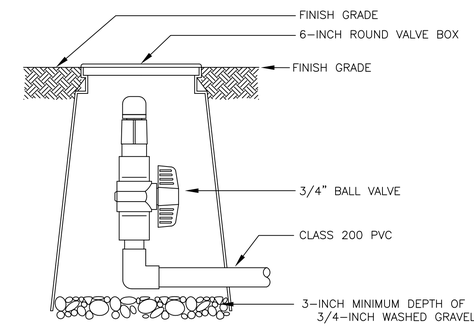

5 / L5 DRIP FLUSH DETAIL

NTS

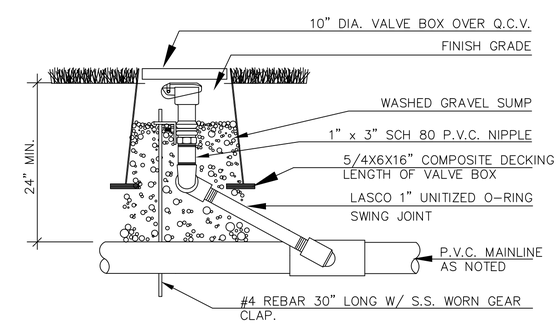

6 / L5 QUICK-COUPLING VALVE DETAIL (1")

NTS

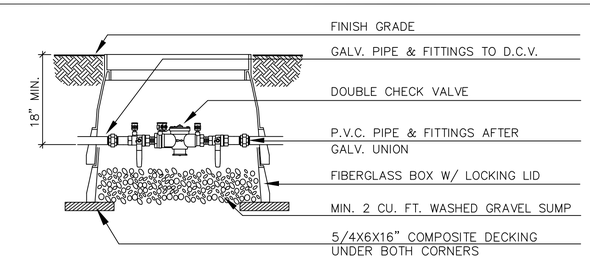

7 / L5 DOUBLE CHECK BACKFLOW PREVENTER DETAIL

NTS

MEARS DESIGN GROUP
Landscape Architecture & Planning
PO Box 23338 | Tigard, Oregon | 97281
Phone: 503.601.4516 | Fax: 503.924.4688

REGISTERED 540 · TROY A. MEARS · OREGON · LANDSCAPE ARCHITECT

ASH CREEK REFORESTATION

TREE PLANTING PROJECT

SW 74TH AVENUE
CITY OF TIGARD, OREGON

REVISIONS

REV.	DATE	DESCRIPTION

SHEET NAME: DETAIL SHEET

DRAWN BY:	TAM
CHECKED BY:	TAM
ISSUE DATE:	4/29/2011
JOB NO.:	0927

SHEET: L5

OF 6